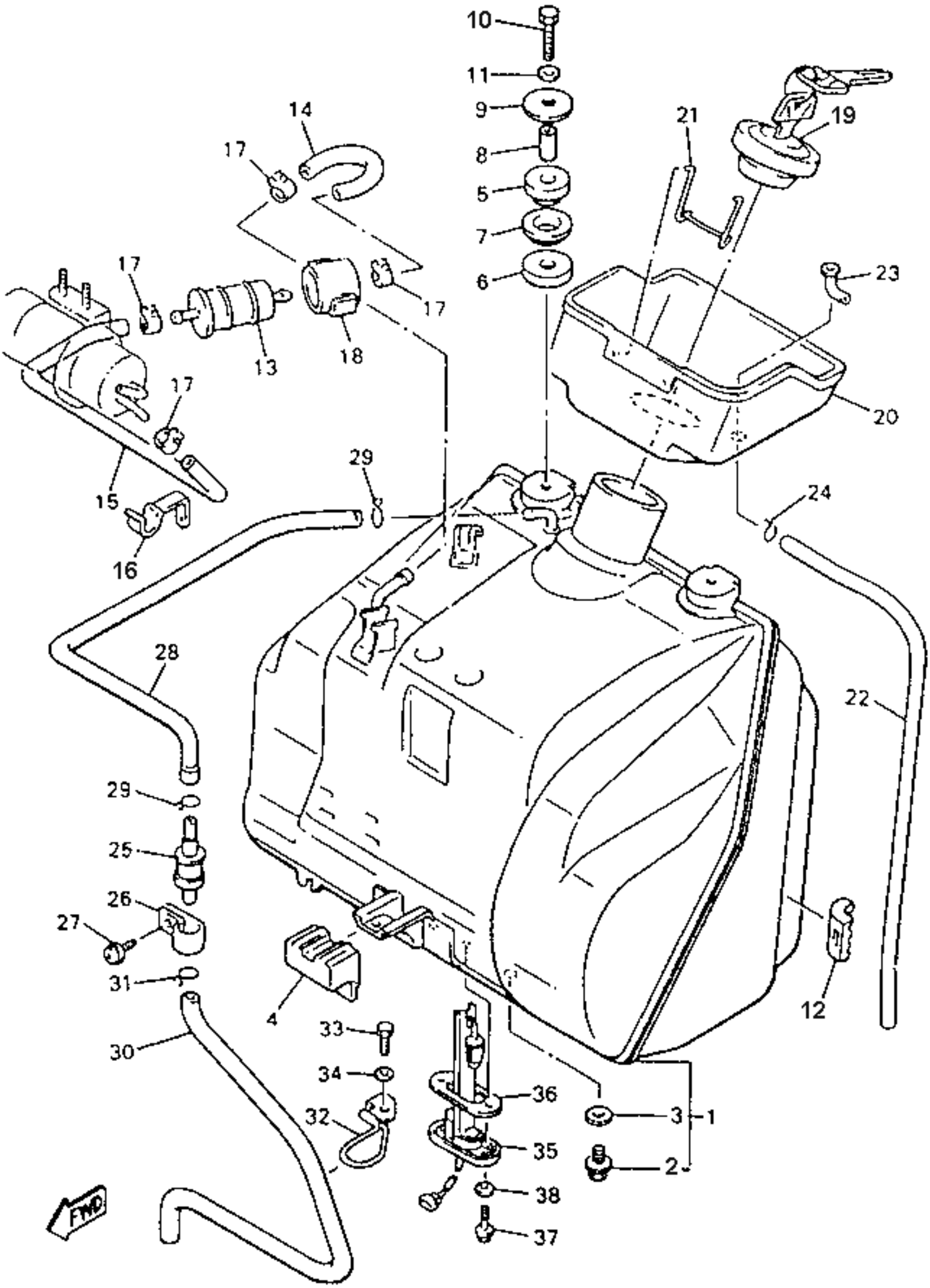
10
11
9
8
5
7
6
14
17
21
19
23
20
13
18
15
16
29
24
28
22
25
26
27
31
30
4
33
34
32
36
35
38
37
3
1
2
12
FWD

FUEL TANK - NON-CALIFORNIA

Pos.-Nummer	Ersatzteilnummer	Bezeichnung	Preis in US $
1	1FK-24110-01-33	FUEL TANK COMP. (YAMAHA BLACK (033))	175.00
2	95817-08012-00	...BOLT, FLANGE	1.02
3	90201-08087-00	...WASHER, PLATE	1.20
4	1FK-24181-00-00	DAMPER, LOCATING 1	8.84
5	1FK-24182-00-00	DAMPER, LOCATING 2	4.30
6	23T-24724-01-00	DAMPER, SEAT	4.10
7	1FK-24186-00-00	WASHER, SPECIAL	4.72
8	90387-06387-00	COLLAR	2.88
9	90201-065G8-00	WASHER, PLATE	2.46
10	97017-06030-00	BOLT	0.82
11	92907-06600-00	WASHER, PLATE	0.62
12	1FK-24184-00-00	DAMPER, LOCATING 4	6.16
13	1FK-24560-00-00	FILTER ASSY	6.40
14	1FK-24314-00-00	PIPE 4	8.42
15	1FK-24315-00-00	PIPE 5	5.54
16	90464-30071-00	CLAMP	2.26
17	90467-12124-00	CLIP	2.06
18	1FK-24566-00-00	BRACKET, FILTER	7.38
19	47G-24650-00-00	CAP ASSY	80.04
20	1FK-2414A-00-00	COVER, FILLER	19.50
21	1FK-24393-00-00	SPRING	5.14
22	90445-084J3-00	HOSE	2.88
23	1FK-24376-00-00	PIPE, JOINT 1	3.48
24	90467-08021-00	CLIP	2.68
25	25H-24180-00-00	ROLL OVER VALVE ASSY	21.72
26	90461-15100-00	CLAMP	2.26
27	97707-50612-00	SCREW, TAPPING	0.62
28	1FK-24311-00-00	PIPE, FUEL 1	12.12
29	90467-10008-00	CLIP	1.20
30	90445-105G5-00	HOSE	4.31
31	90467-09006-00	CLIP	2.46
32	1FK-2419A-00-00	HOLDER	8.00
33	97017-06016-00	BOLT	0.82
34	92907-06600-00	WASHER, PLATE	0.62
35	1FK-85752-00-00	SENDER UNIT ASSY, FUEL METER	48.22
36	42X-85753-00-00	GASKET, SENDER UNIT	5.14
37	90149-06011-00	SCREW	2.88
38	90202-05187-00	WASHER PLATE	1.20